PRO-B601
DTF Powder Shaker

Hanrun paper®

WWW.HANRUNPAPER.COM

Big Performance. Small Footprint.

FEATURES

Compact Design
The compact structure fits through 90cm doorways, saving space and enabling flexible installation.

Equipped with Pre-heating Plate
Quickly dries the ink for sharper images and more consistent powdering.

Automatic Rewinding System
The automatic rewinding system keeps the film neatly collected, improving production efficiency.

Easily Passes
90cm(35.4'') Doors

Door Width
90CM
(35.4'')

Side Width
(Without Rewinding System)
75CM
(29.5'')

Smart Design
The 7-inch touchscreen features a clear and intuitive interface for simple and convenient operation.

Dual Powder Recovery Bin Design
Efficiently recovers excess powder, simplifies maintenance, enables continuous operation, and prevents powder leakage.

Ideal Entry-level Solution
A cost-effective DTF finishing solution designed for beginners and growing businesses.

PRO-B601 is a compact and intelligent DTF powder shaker designed for small to medium-sized DTF production, providing an efficient and reliable finishing solution.

With its space-saving design, the machine easily passes through standard 90cm doorways, making it ideal for studios, small production workshops, and space-limited environments. It also supports connection with DTF printers, enabling a seamless printing-to-finishing workflow.

The PRO-B601 integrates uniform powder shaking, pre-heating, curing, and automatic rewinding into one compact unit, delivering a complete DTF finishing process within a small footprint. Equipped with a dual powder recovery bin system, it improves powder management efficiency. The 7-inch smart touchscreen provides real-time parameter display and intuitive operation for enhanced user experience.

DETAILS

COMPACT DESIGN, SPACE SAVING

With a compact and streamlined design, the machine is easy to move and install. It can pass through a 90 cm standard doorway, making it an ideal solution for space-limited studios and production workshops.

EQUIPPED WITH PRE-HEATING PLATE

Quickly dries the freshly printed ink before powdering, helping reduce ink spreading and improve image clarity and powdering consistency.

DUAL POWDER RECOVERY BIN

Efficiently recovers excess powder, simplifies maintenance, enables continuous operation, and prevents powder leakage.

AUTOMATIC TAKE-UP SYSTEM

Equipped with an automatic take-up system, the machine ensures smooth and even winding, making material collection more convenient and efficient.

KEY FEATURES

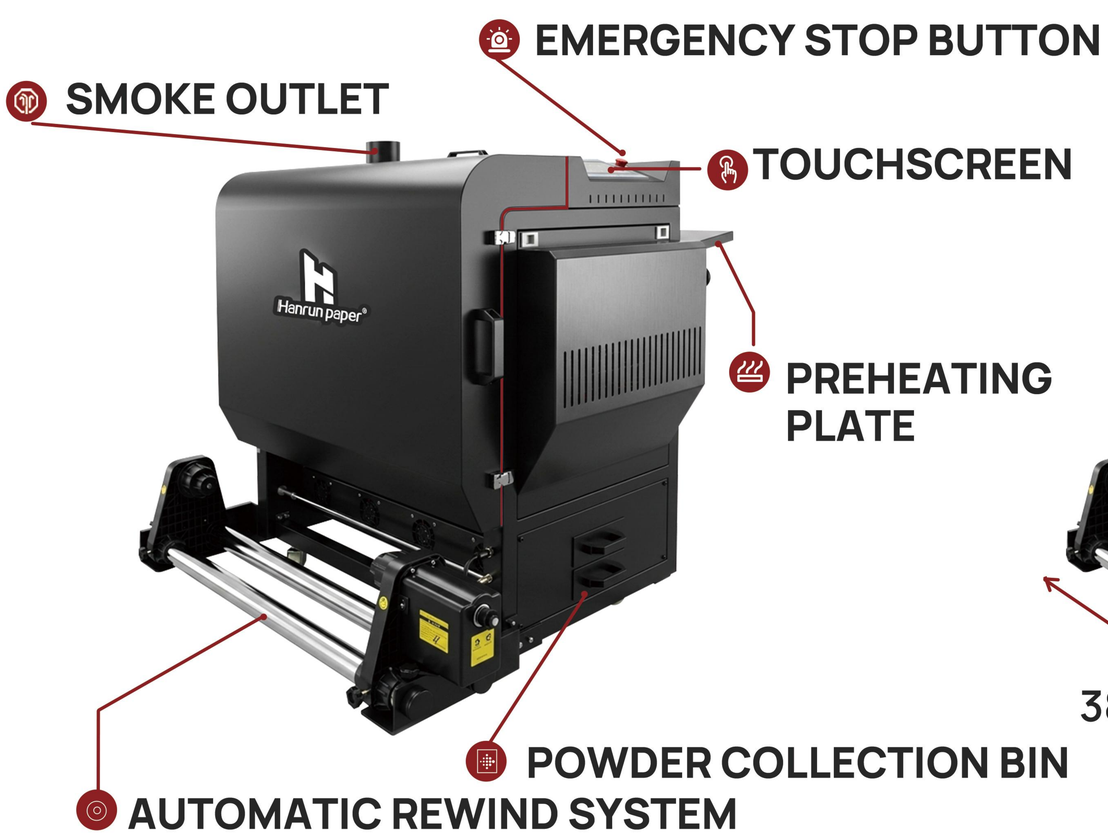

MACHINE DIMENSIONS

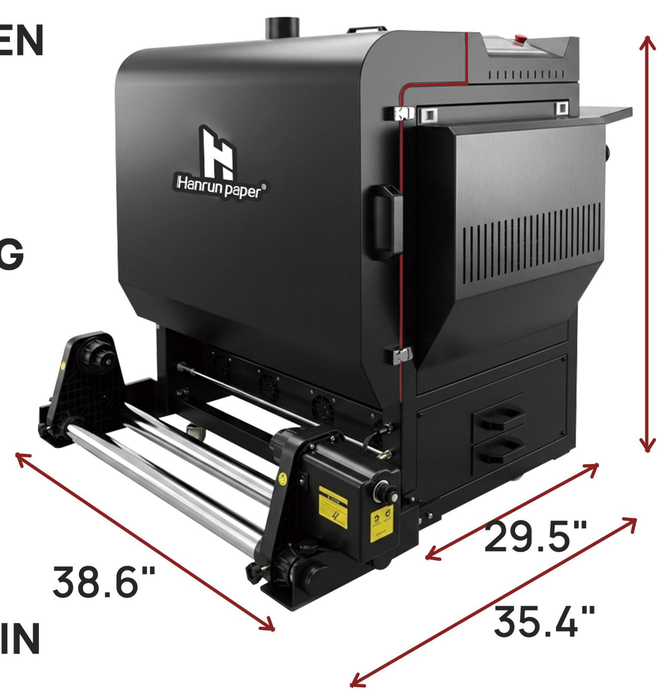

DIMENSIONS

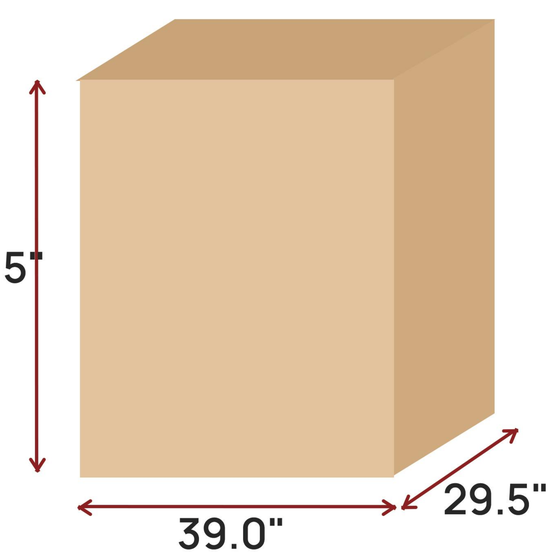

Note: If customers need the equipment to pass through a 90 cm-wide door, the rewinding system can be temporarily left uninstalled, while the pre-heating plate remains in the lowered position. With an equipment width of approximately 75 cm, the machine can easily pass through a standard 90 cm doorway.

SPECIFICATION

PRO-B601 DTF POWDER SHAKER	
Model	PRO-B601
Max width	600mm /23.6"
Heat temperature	0-200℃
Drying Length	700mm/27.6"
Voltage	AC110/220V 50/60HZ
Power	4.2kW
Machine Dimensions Net weight	980*900*1100（mm）/95.6kg 38.6" × 35.4" × 43.3"
Packing size /Gross weight	990*750*1180（mm）/130kg 39.0" × 29.5" × 46.5"

APPLICATION